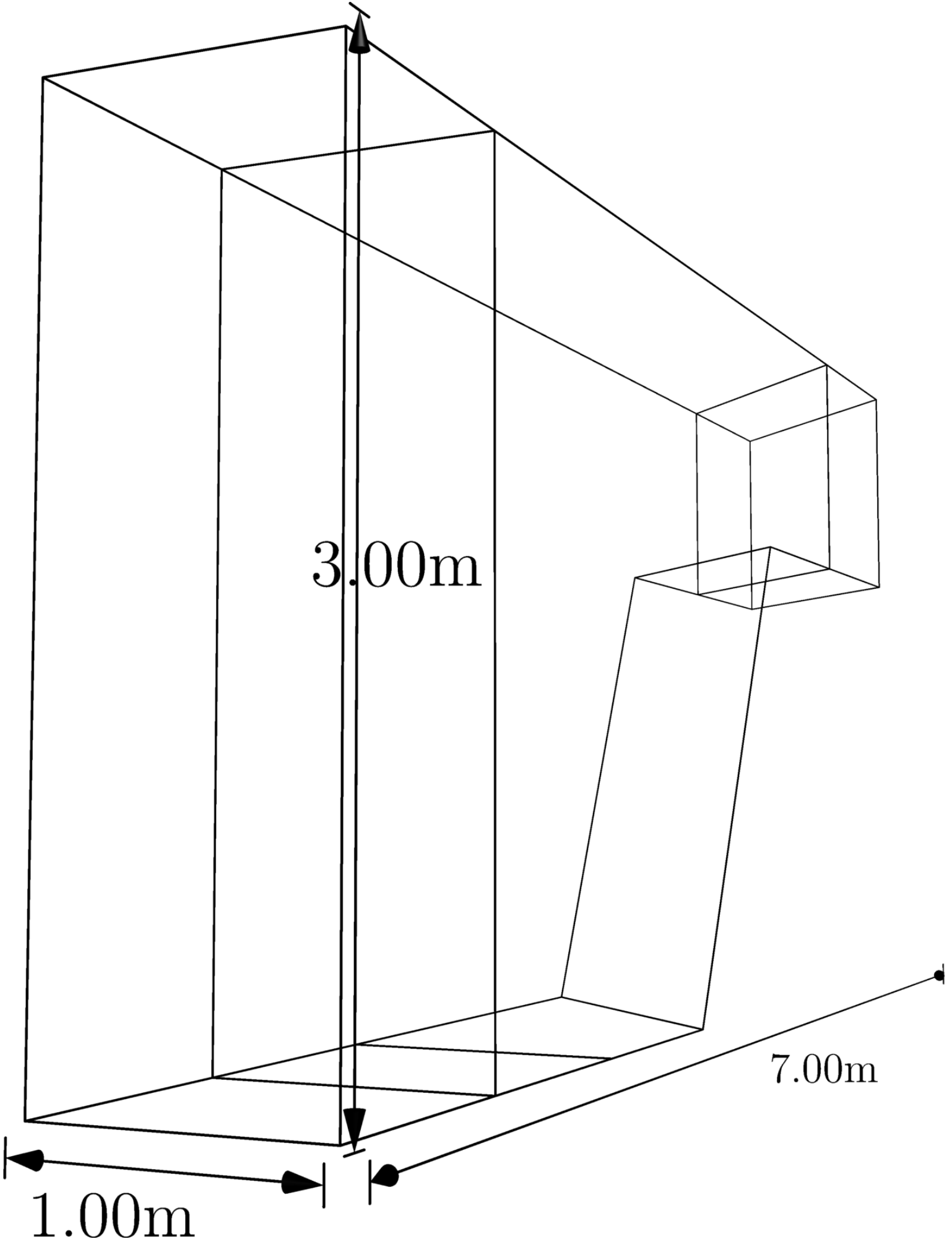
3.00m
7.00m
1.00m