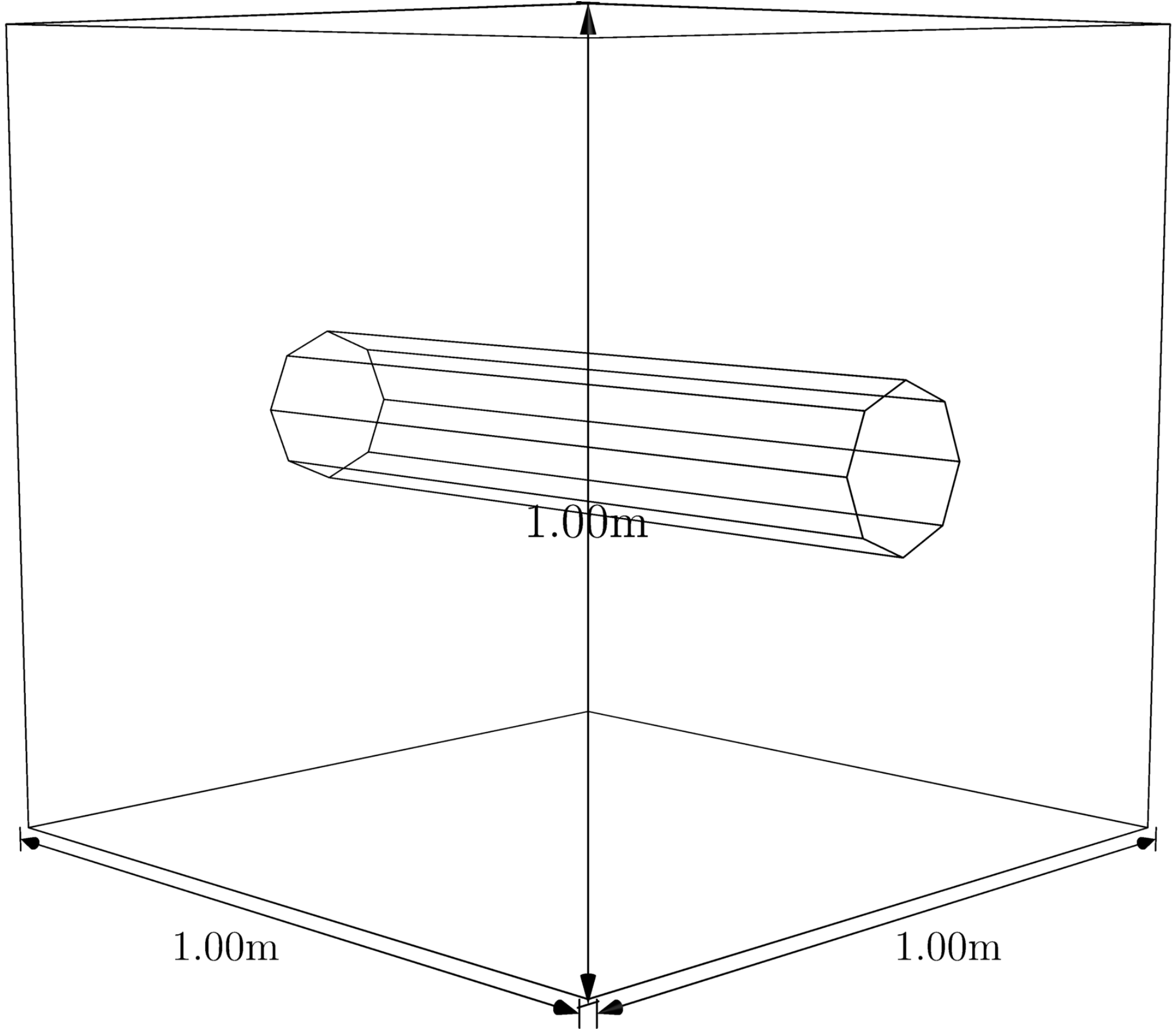
1.00m
1.00m
1.00m